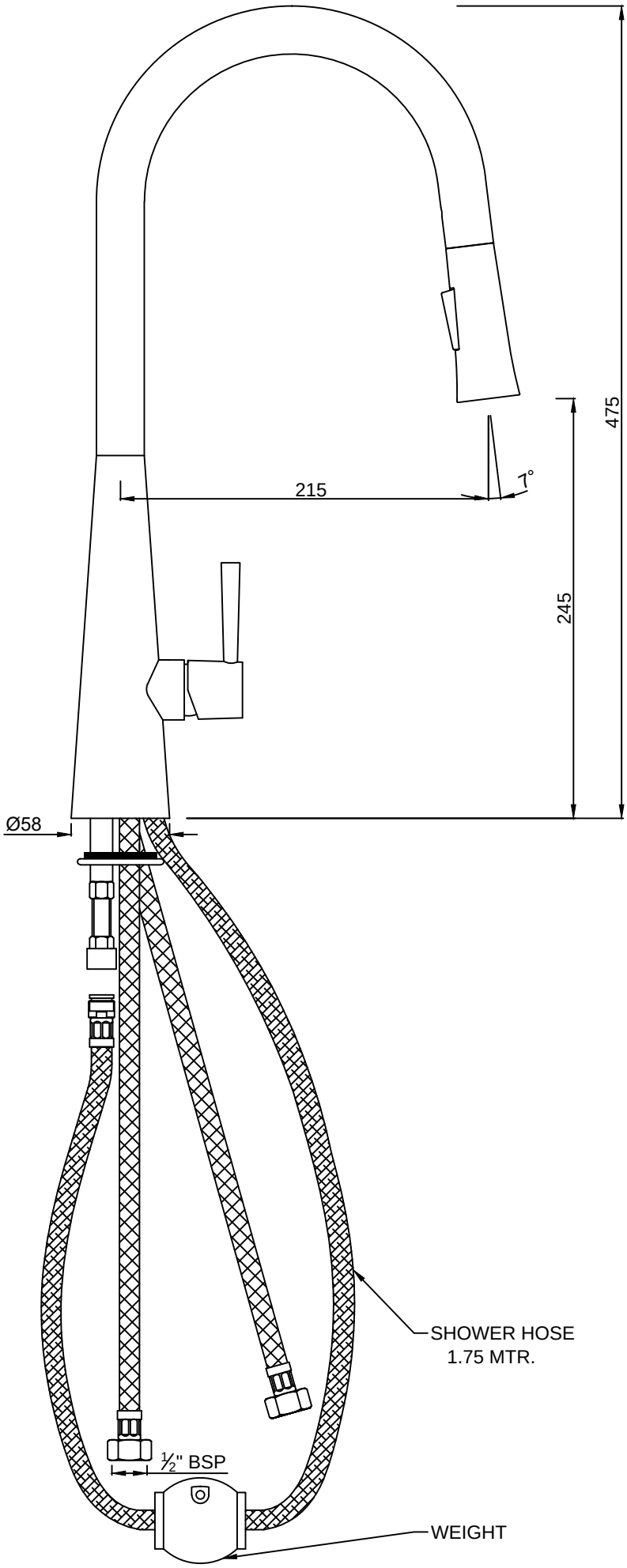Single Lever Pulldown Conical Sink Mixer with spray & aerated flow sprayhead	CAT.NO. AKF-77155B