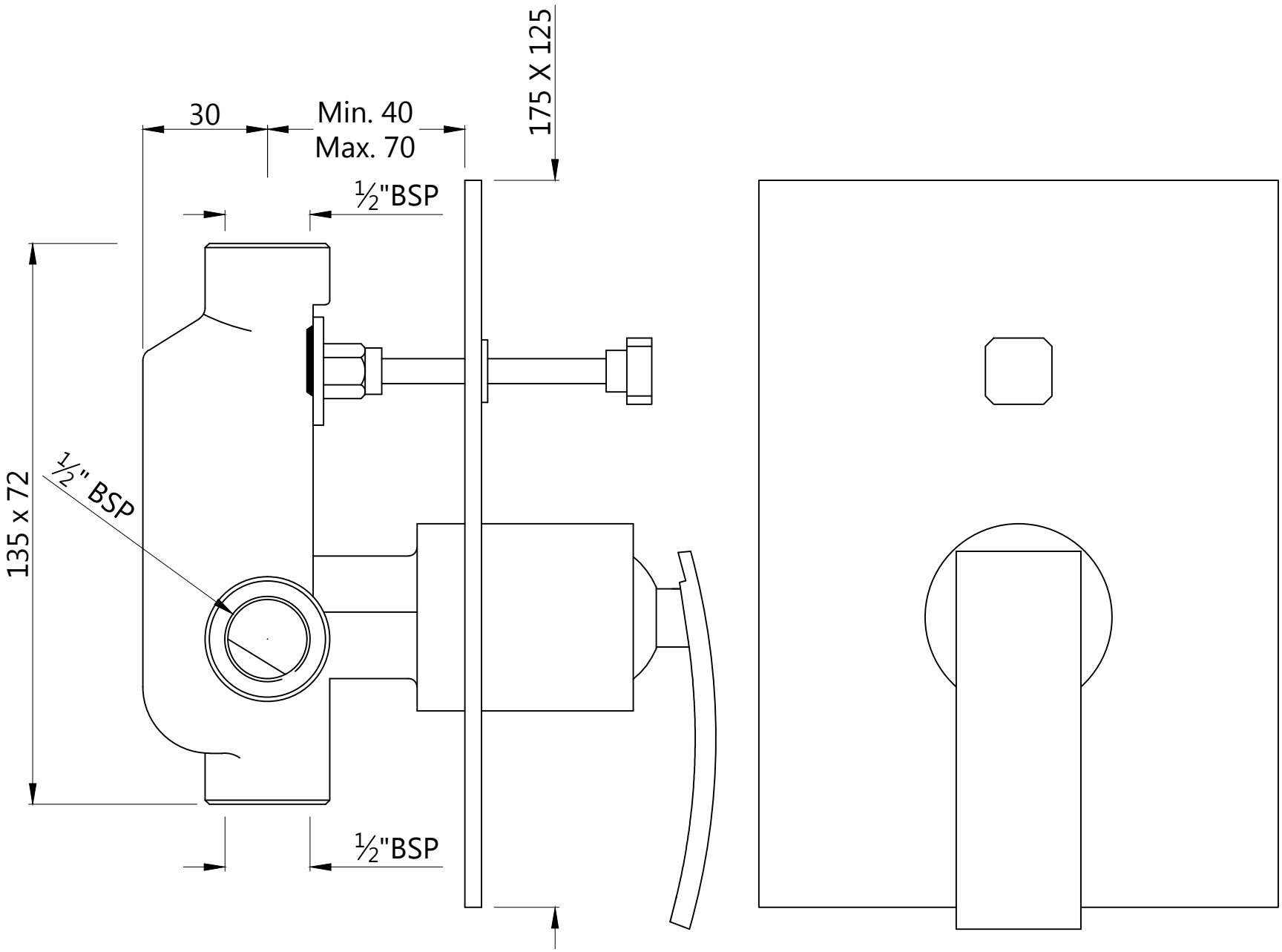Single Lever Concealed Divertor For Bath & Shower Mixer	Cat. No.-XQU-43065