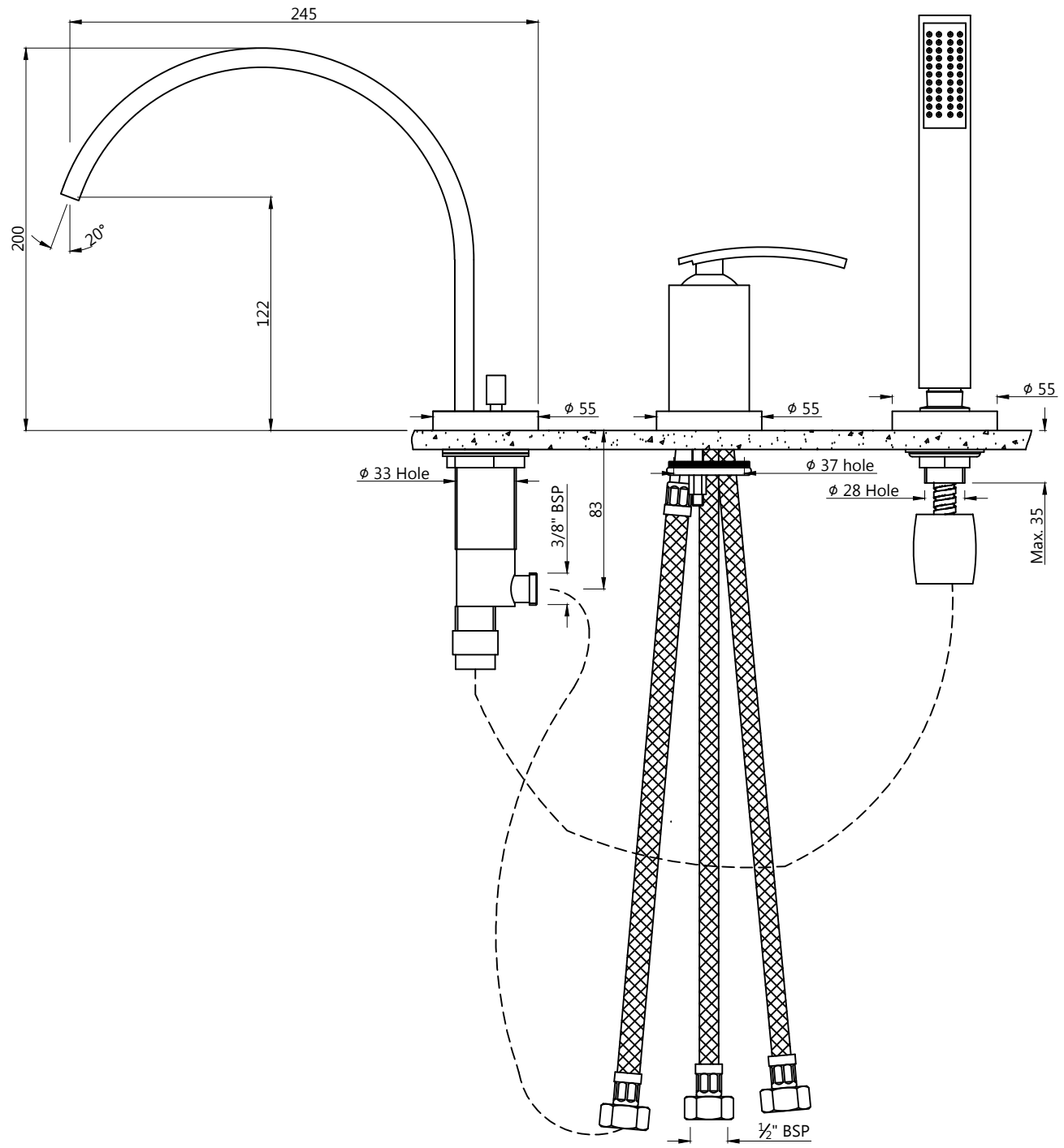Single Lever 3 Hole Bath Tub Mixer Consisting of a Spout, a Handshower & Control Unit	Cat. No.-SIG-41277