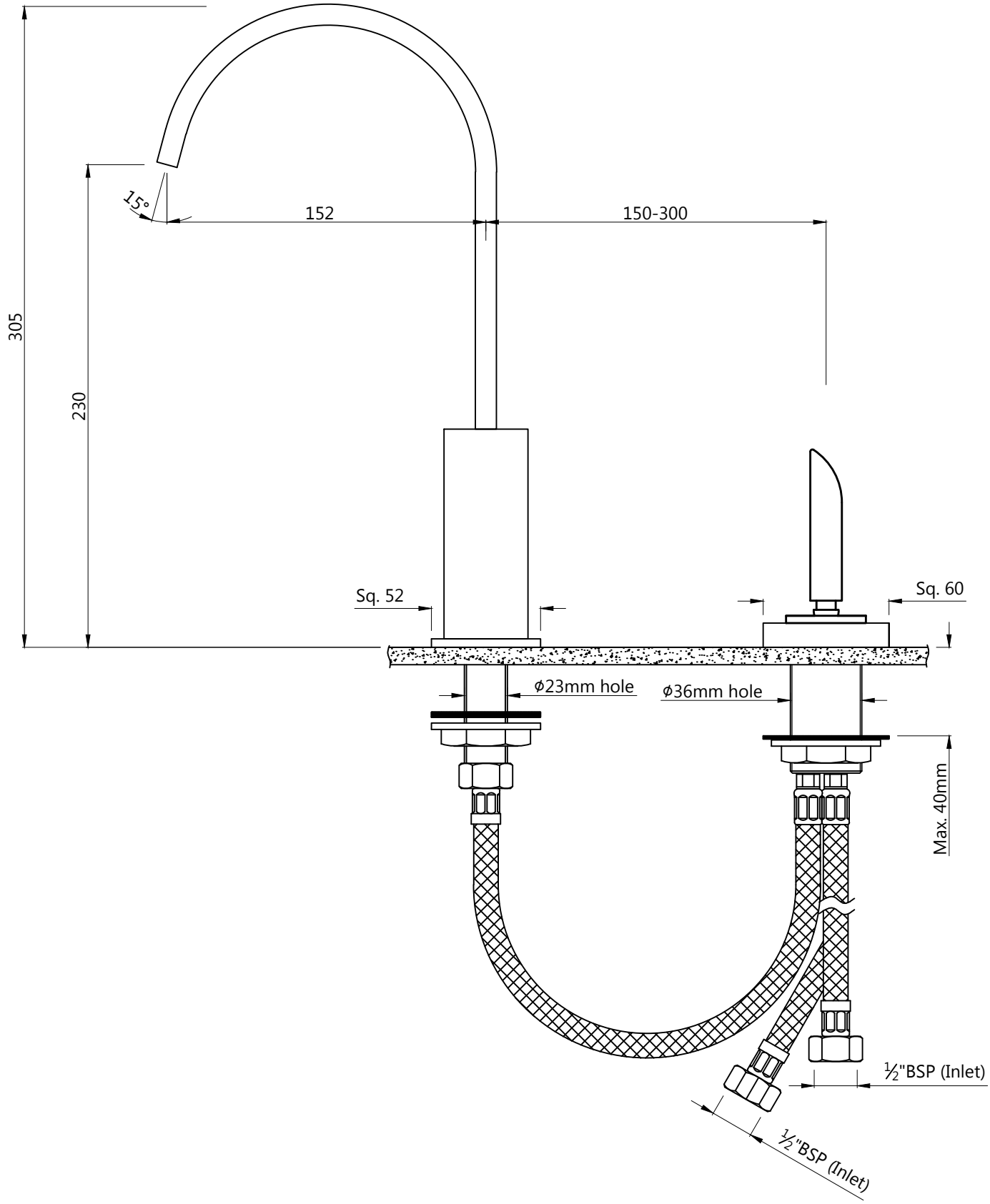2-Hole Deck Mounted Single Lever Basin Mixer	Cat. No.-LEX-67187