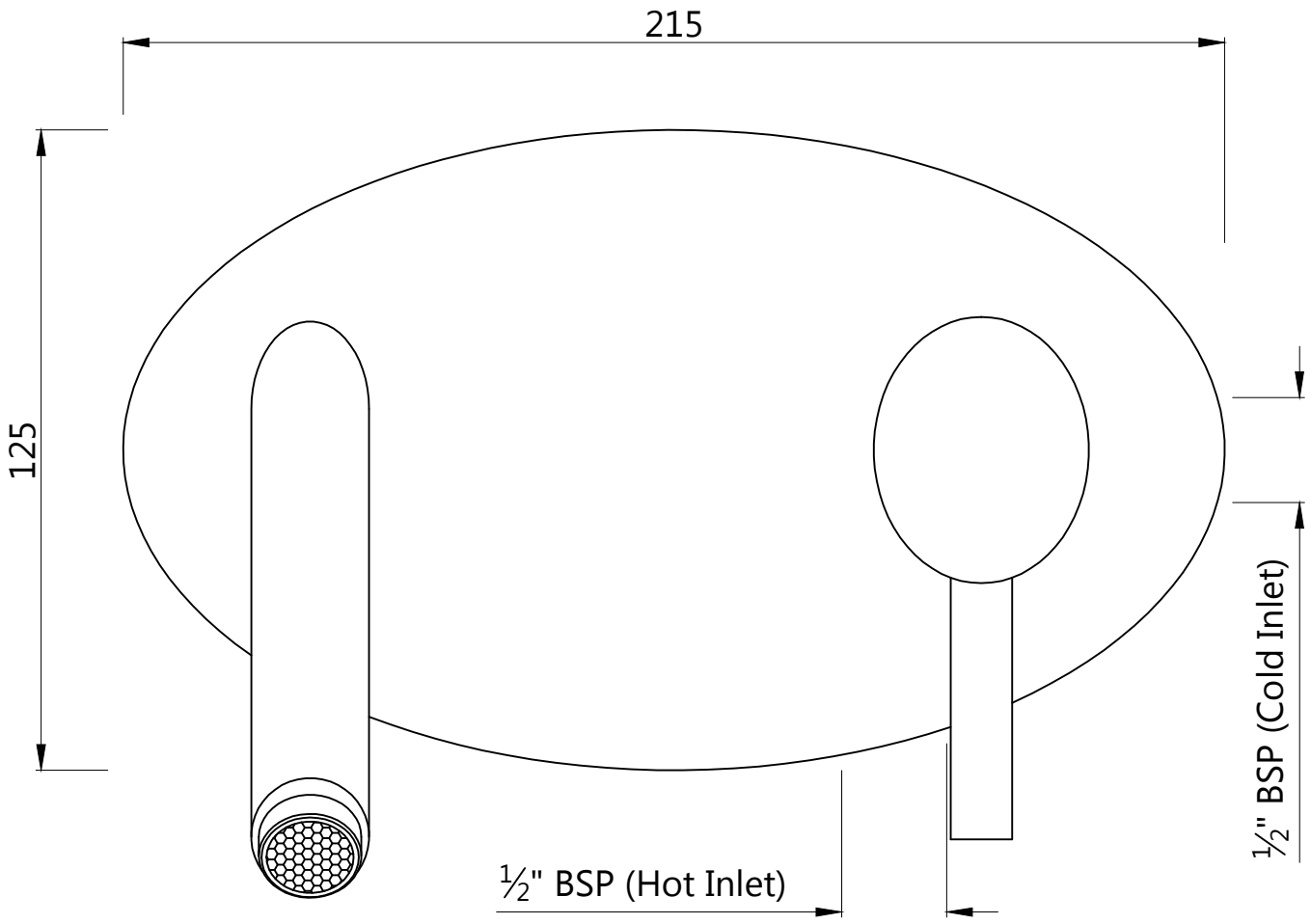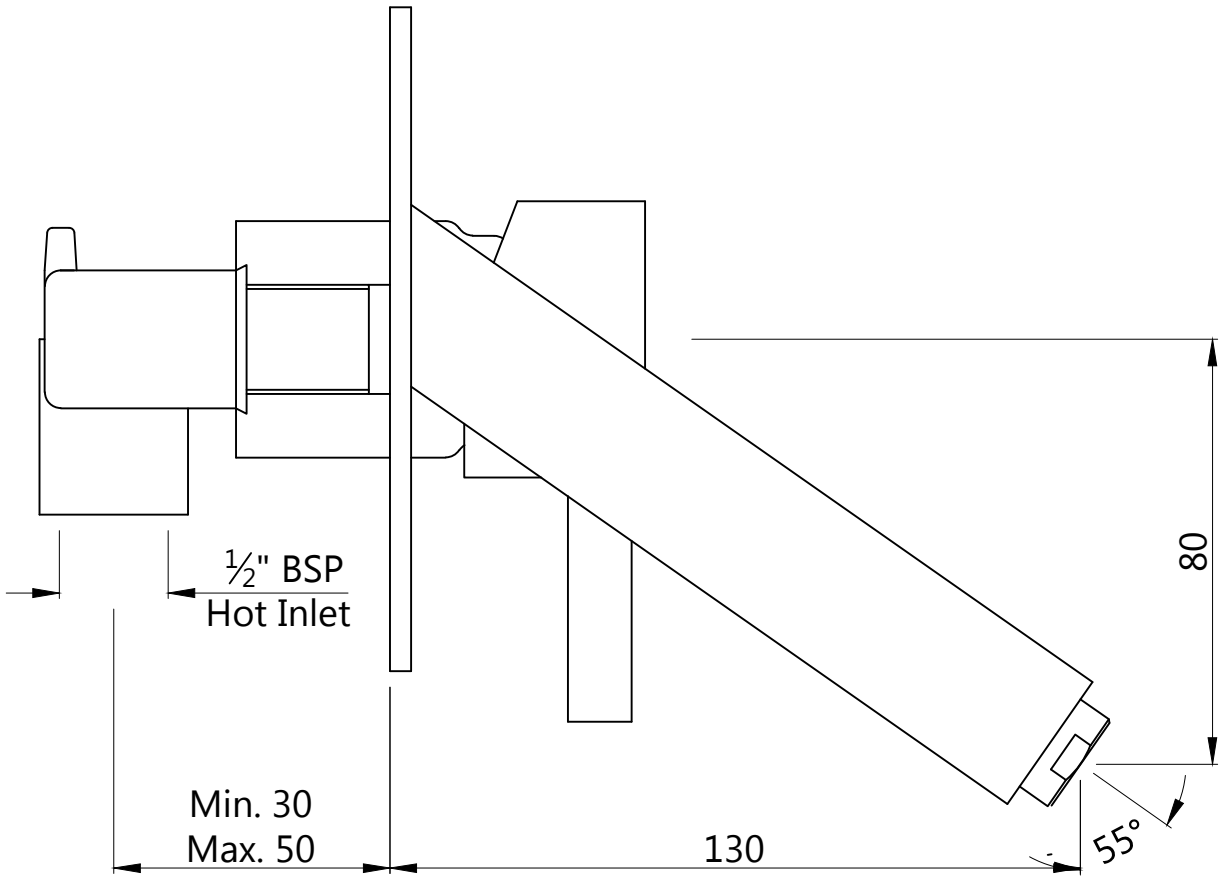Single Lever Concealed Basin Mixer With Spout	Cat. No.-KAV-49233 N