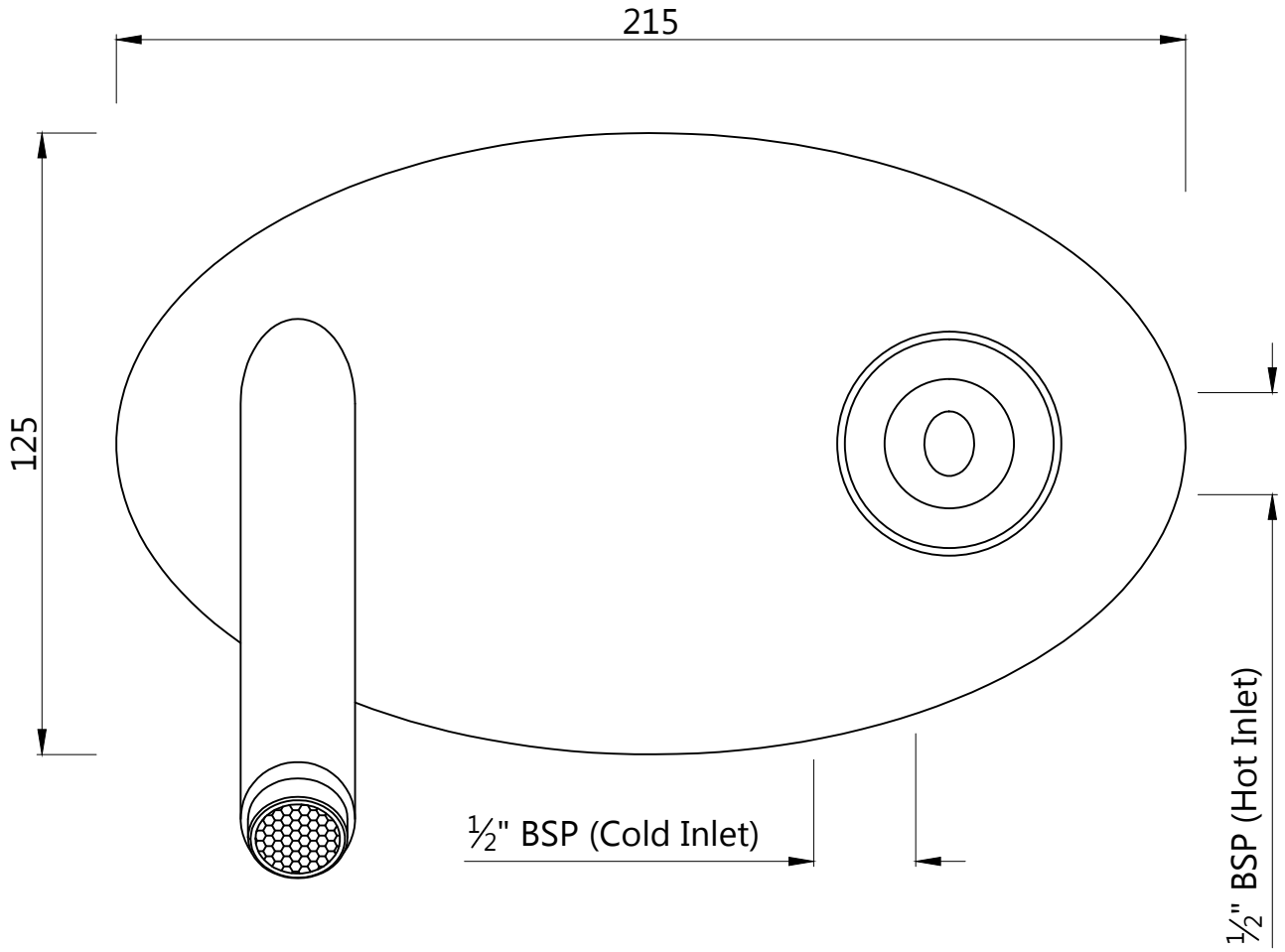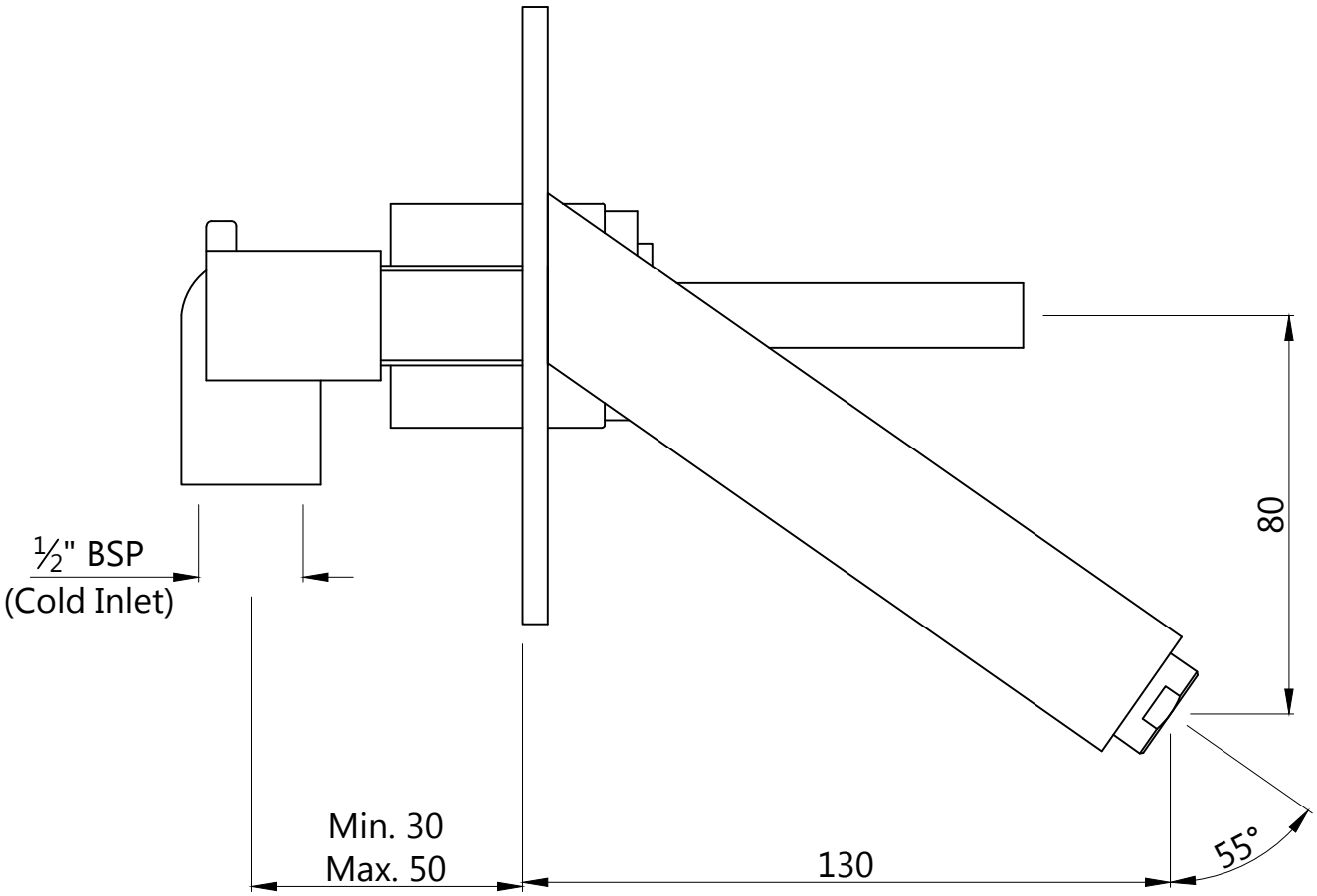Single Lever Joystick Concealed Basin Mixer with Spout	Cat. No.-KAV-49233 JN