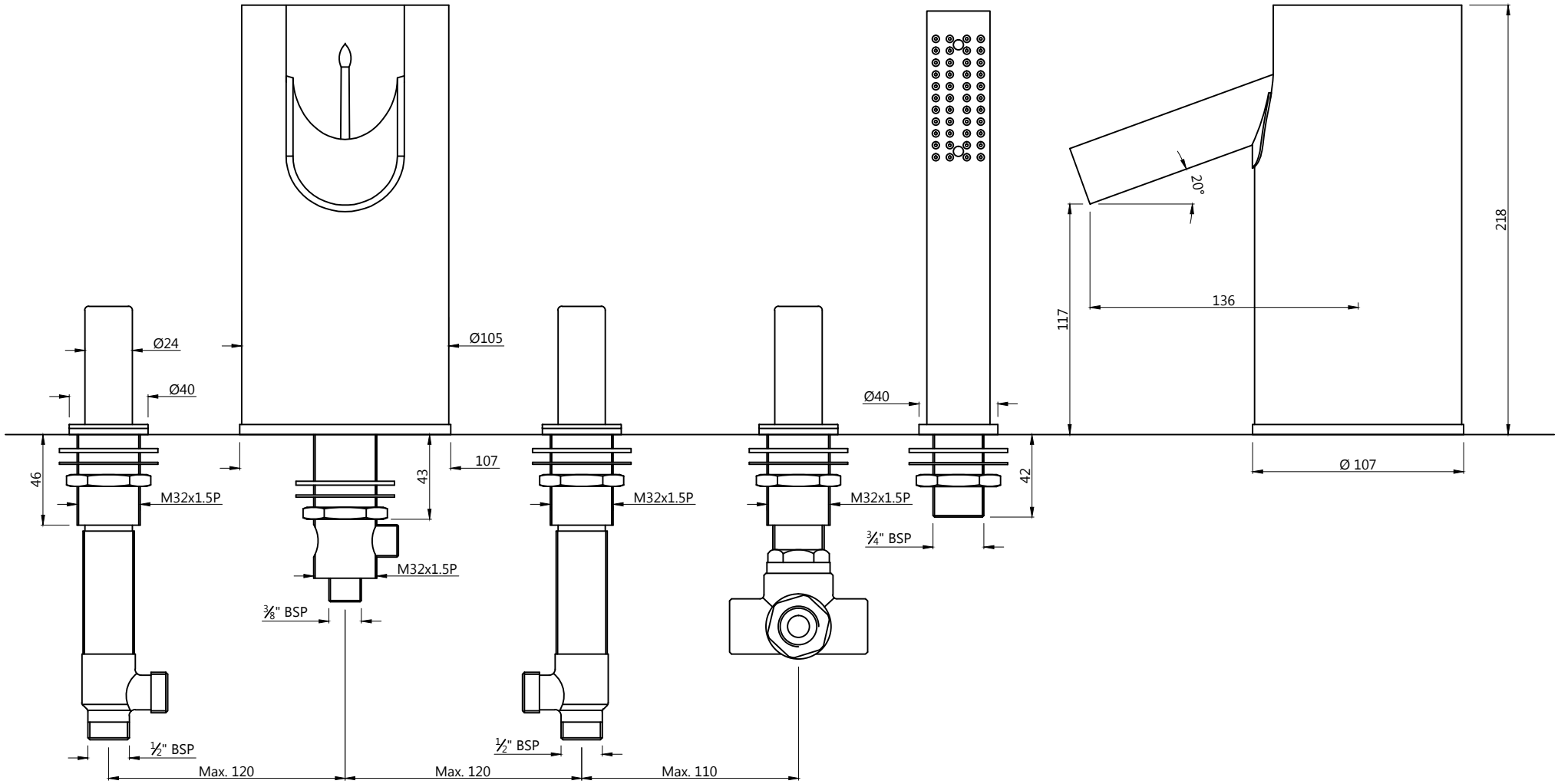5-Hole Bath Tub Mixer With Hot & Cold Control Cocks, Spout, Divertor & Hand shower With 8mm dia. & 1.5M Flexible Tube	Cat. No.-FLE-63287