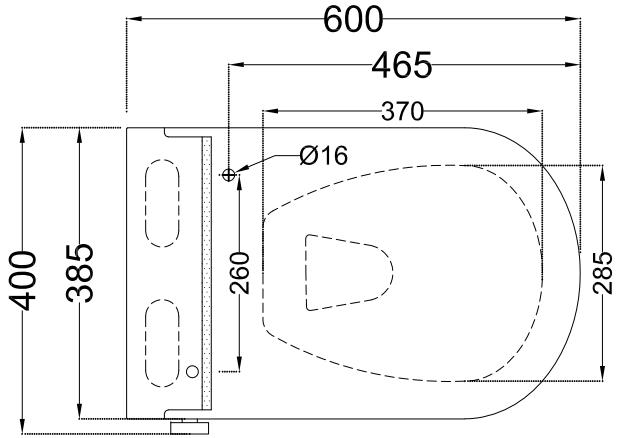

TOP VIEW

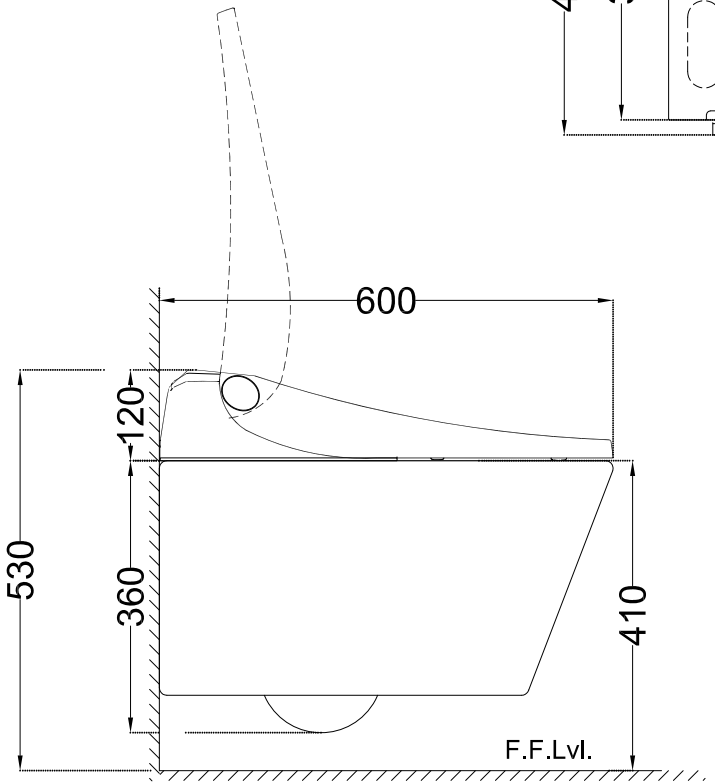

SIDE VIEW

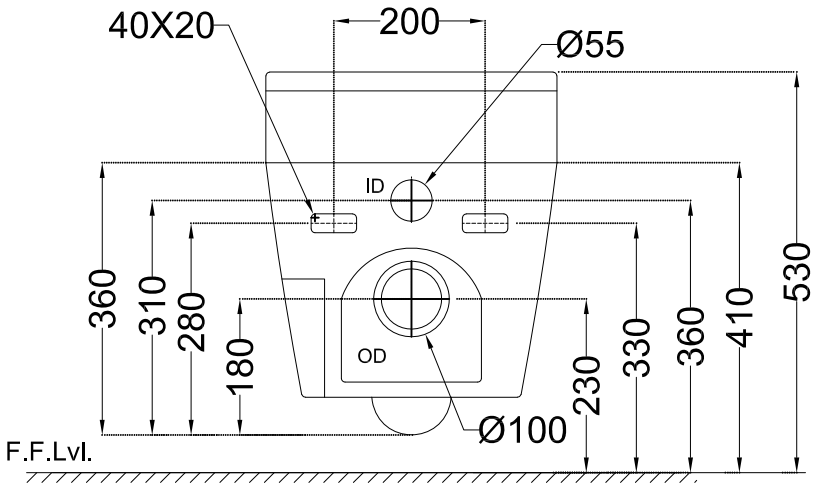

BACK VIEW

Artize	Jaquar Group Global Headquarters Plot No. 3, Sector- M-11, IMT Manesar Gurgaon, NCR - 122050, India E-mail : **Sales: support@jaquar.com** Customer Service : **service@jaquar.com**	ITEM CODE	IAS-WHT-79953BIPP
		ITEM TYPE	WALL HUNG WC
		ITEM SIZE	400x600x480 mm
		ALL DIMENSIONS ARE IN MM. (TOLERANCE ± 5 MM)	